STEP 1

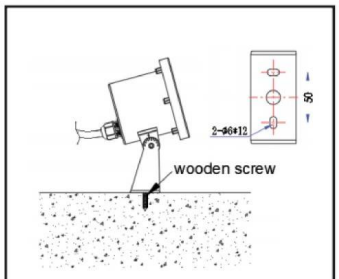

Drill two holes on the wall or floor according to the hole position of the support, and put rubber plugs or wood blocks into the holes, use wood screws to fix the lamp on the wall or floor.

STEP 2

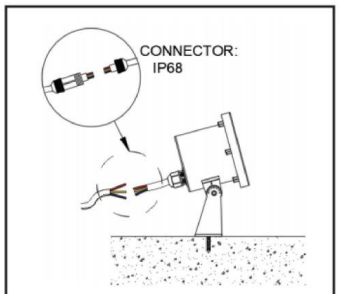

Put the power cord and the power cord of the lamp into the IP68 waterproof connector.

STEP 3

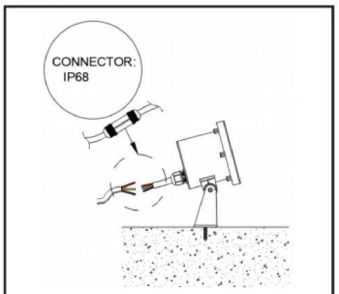

Connect the power cord with the power cord of the lamp, and then lock the waterproof connector.

STEP 4

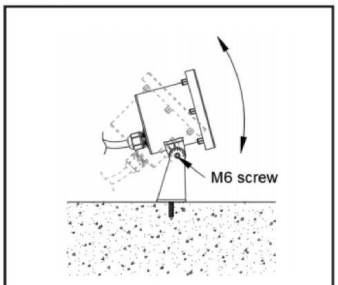

Loosen the M6 screw of the support, adjust the Y axis angle of the lamp and then lock the screw.
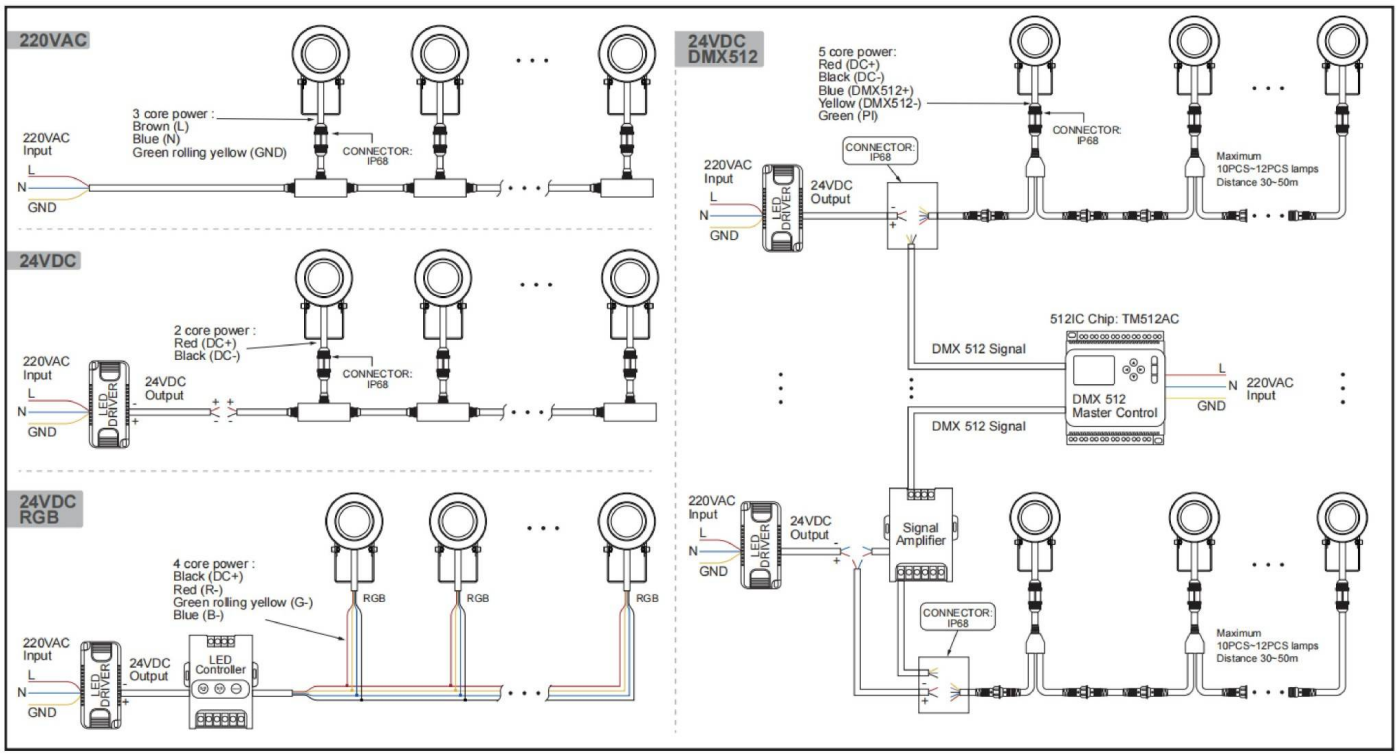
CONNECTION DIAGRAM